DocuSign Envelope ID: 2BE31C22-FB8E-48C1-A52C-9ED40587F8BE

PROJECT REFERENCE NO.	SHEET NO.
47333	2A-1

ROADWAY DESIGN ENGINEER	PAVEMENT ENGINEER
NORTH CAROLINA PROFESSIONAL SEAL 17355 ENGINEER J. B. SUTTLE, JR. SEAL Docusigned by: 5/9/2018 1:52:11 PM PDT	

DOCUMENT NOT CONSIDERED FINAL UNLESS ALL SIGNATURES COMPLETED

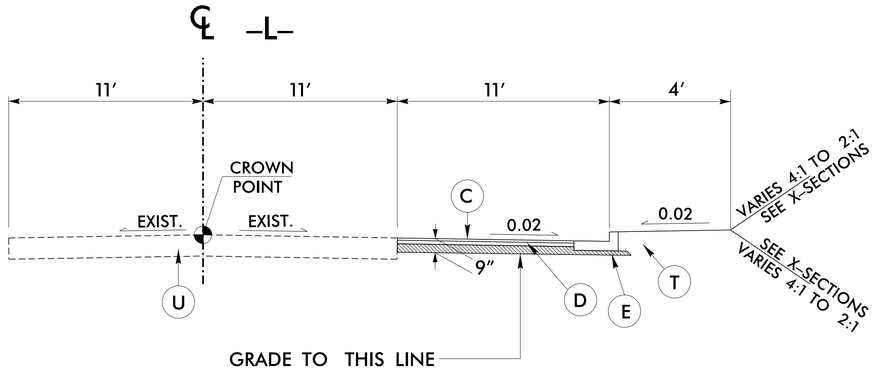

USE TYPICAL SECTION NO. 2

–L– STA. 59+09.49 TO –L– STA. 59+84.49

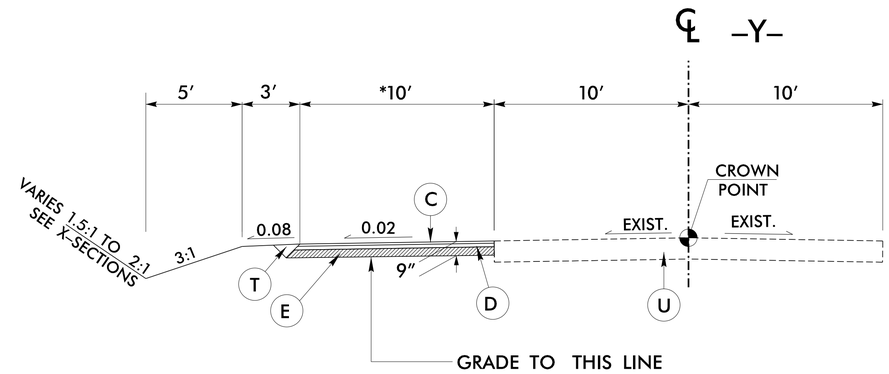

USE TYPICAL SECTION NO. 3

–Y– STA. 10+70.01 TO –Y– STA. 11+31.32

* –Y– STA. 11+31.32 TO –Y– STA 12+59.98–VARIES 0′ TO 10′

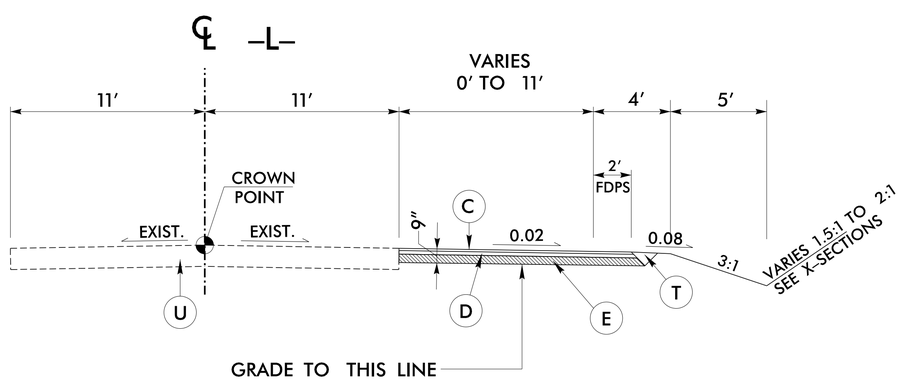

USE TYPICAL SECTION NO. 1

–L– STA. 58+09.49 TO –L– STA. 59+09.49

PAVEMENT SCHEDULE	
C	PROP. APPROX. 1.5″ ASPHALT CONC. SURFACE COURSE, TYPE S9.5C AT AN AVGERAGE RATE OF 168 LBS. PER SQ. YD.
D	PROP. APPROX. 2.5″ IN ASPHALT CONC. INTERMEDIATE COURSE, TYPE I19.0C AT AN AVG. RATE OF 285 LBS PER SQ. YD.
E	PROP. APPROX. 5″ ASPHALT CONCRETE BASE COURSE, TYPE B25.0C, AT AN AVERAGE RATE OF 570 LBS. PER SQ. YD.
T	EARTH MATERIAL
U	EXISTING PAVEMENT

PAVEMENT EDGE SLOPES ARE 1:1 UNLESS OTHERWISE NOTED.

5/14/99
5/9/2018
V:\Asheville\transportation\31732-01, NC 191 at Banner Farm Road, Henderson Co\Roadway\Proj\47333_rdy_typ.dgn
Usertic (mpatel)